*Studia Geotechnica et Mechanica, Vol. XXXI, No. 3, 2009*

# NEW APPROACH TO ASSESSMENT OF ROAD EMBANKMENT STABILITY

ANDRZEJ BATOG, ELŻBIETA STILGER-SZYDŁO

Institute of Geotechnics and Hydrotechnics, Wrocław University of Technology,
Wybrzeże Wyspiańskiego 27, 50-370 Wrocław, Poland.

**Abstract:** The stability of scarps and slopes is one of major problems in road engineering. Despite an extensive research, there is no complete, general theory that could be fully applied to the analysis of slope stability. In this article, the authors discussed possible ways of the assessment of road embankment slope stability and the interpretation of the results obtained, bearing in mind the procedures introduced by Eurocode 7. Both discussion and interpretation were based on the results of the computations carried out for several dozen cross-sections of a road embankment characterized by a large variability of foundation conditions. Our assessment was related to the requirements of slope stability defined by Polish regulations.

**Streszczenie:** Stateczność skarp i zboczy jest jednym z ważniejszych problemów w budownictwie drogowym. Pomimo wielu badań brak jest kompletnej, ogólnej teorii, którą można by w pełni zastosować do analizy stateczności zboczy. Autorzy opisali sposoby oceny stateczności skarp nasypów drogowych oraz zinterpretowali uzyskane wyniki, uwzględniając procedury wprowadzone przez Eurokod 7. Zostały one oparte na wynikach obliczeń przeprowadzonych dla kilkudziesięciu przekrojów nasypu drogowego, charakteryzującego się dużą zmiennością warunków posadowienia. Otrzymane oceny odniesiono do wymagań, jakim musi odpowiadać stateczność skarp zgodnie z przepisami krajowymi.

**Резюме:** Устойчивость откосов и склонов является одной из важнейших проблем в дорожном строительстве. Несмотря на многочисленные исследования, нет полной общей теории, которую можно использовать для анализа устойчивости склонов. Авторы представили описание способов оценки устойчивости откосов дорожных насыпей, а также интерпретацию полученных результатов, учитывая процедуры, введенные Еврокодом 7. Они базировали на результатах расчетов, проведенных для нескольких десятков сечений дорожной насыпи, характеризующейся большой изменчивостью условий заложения. Полученные оценки были отнесены к требованиям, каким должна отвечать устойчивость откосов согласно отечественным правилам.

## 1. INTRODUCTION

The stability of scarps and slopes is one of major problems in road engineering. The research carried out in transportation engineering stimulates creating new technical conditions for both designing and construction of earthen structures. Its aim is to produce an optimal design and to anticipate the behaviour of

scarps and slopes. The methods predominating in a theoretical dimensioning of slopes based on plasticity theory include the limit equilibrium methods and the methods of the limit state of stress, taking account of both static and kinematic points of view [5]. The methods of limit equilibrium belong to the fundamental methods of scarp and slope stability analysis employed in engineering practice. They presuppose that the limit state occurs on certain surfaces of the localized slip. Having assumed a certain mechanism of deformation or destruction along the slip surface, the system of forces associated with that mechanism is investigated. Contemporary development of numerical methods (finite difference method (FDM), boundary element method (BEM) and, above all, finite element method (FEM)) and constitutive soil models place numerical analyses on the top of testing instruments used for solving several geotechnical boundary issues, including scarp and slope stability. Popular programs such as BEASY (in BEM) and FLAC (in FDM) as well as software packages for FEM (for example, ABAQUS, HYDRO-GEO, Z_SOIL) make it possible to take into account diverse hydrological conditions in the subsoil, filtration of water in a porous medium, and soil consolidation; they enable a step-by-step carrying out of structure computations (i.e., the simulation of a gradual construction of an earthen structure).

Despite an extensive research, there is no complete, general theory that could be fully applied to the analysis of slope stability. This results from a very complex nature of the phenomenon of slope failure, depending on various hydrogeological conditions, geological structure, tectonic distortions, dynamic load, as well as chemical and biological influences. The difficulties arising in such cases lie in determining the state of stress and displacement in the slopes, hence they enforce idealization when assuming a physical model.

In Poland, from the year 2010 on, in accordance with the decision of European Committee, Eurocodes and the standards consistent with them will constitute the sole and fully operative point of reference. Erocode 7 [6], which has introduced new computational approaches towards the analysis of geotechnical problems, including slope stability analysis, has announced a number of instructions and guidelines pertaining to the methods of stability analysis. However, neither the criteria of selection of design approaches nor the guidelines for result interpretation have been provided in the said Eurocode 7.

In this article, the authors discuss possible ways of the assessment of road embankment slope stability and the interpretation of the results obtained, bearing in mind the procedures introduced by Eurocode 7. Both the discussion and the interpretation were based on the results of the computations carried out for several dozen cross-sections of a road embankment characterized by a large variability of foundation conditions. The assessment obtained was related to the requirements for slope stability defined by Polish regulations.

# 2. STABILITY OF ROAD EMBANKMENTS IN KEEPING WITH EUROCODE 7

## 2.1. DESIGN APPROACH

Eurocode 7 instructions [6] referring to the analysis of the stability of embankments are included in Section 11, *Overall stability*, and the guidelines pertaining to the designing of embankments – in Chapter 12: *Embankments*.

In order to carry out the analysis of road embankment slope stability, it is necessary to check the limit states *GEO* and *STR*, the attaining of which is synonymous with the loss of general stability of the soil mass and the adjoined structures (i.e., structural elements of the roadway and road infrastructure), excessive movement or loss of serviceability. The limit state of *GEO* type is connected with the failure occurring in the soil, for example, in the form of an earth slide of a cut slope, a natural slope or a scarp of the embankment founded on a low-bearing subsoil. In turn, the limit state of *STR* type refers to the situation where the failure or large displacement affects both the soil mass and the adjoining structural elements, for example, the failure of an anchored sheet pile wall, where the failure surface intersects the anchors.

Table

The values of partial factors recommended to be used in the analysis of slope stability

| Partial factors | | Design approach | | | |
|---|---|---|---|---|---|
| | | 1 | | 2 (DA2) | 3 (DA3) |
| | | Combination 1 (DA1-1) | Combination 2 (DA1-2) | | |
| *A* | $\gamma_G$ | 1.35 | 1.0 | 1.35 | 1.0* |
| | $\gamma_{Gfav}$ | 1.0 | 1.0 | 1.0 | 1.0 |
| | $\gamma_Q$ | 1.5 | 1.3 | 1.5 | 1.3* |
| *M* | $\gamma_\varphi$ | 1.0 | 1.25 | 1.0 | 1.25 |
| | $\gamma_c$ | 1.0 | 1.25 | 1.0 | 1.25 |
| | $\gamma_\gamma$ | 1.0 | 1.0 | 1.0 | 1.0 |
| *R* | $\gamma_{R;e}$ | 1.0 | 1.0 | 1.1 | 1.0 |

* These actions are treated as geotechnical actions.

In the analysis of stability, one of four design approaches introduced by Eurocode 7 may be potentially applied. The approaches differ with respect to the way the values of separate partial factors are assumed. The partial factors have been divided into three groups:

- $A$ – the partial factors used for actions or the effects of actions, which entail:
  - $\gamma_G$ – the partial factor for unfavourable permanent actions (caused mainly by the soil self-weight; it is not, however, synonymous with the partial factor for the soil self-weight $\gamma_\gamma$),
  - $\gamma_{Gfav}$ – the partial factor for favourable actions,
  - $\gamma_Q$ – the partial factor for variable actions (loads);
- $M$ – the partial factors for soil parameters, including, among others:
  - $\gamma_\varphi$ – the partial factor for the tangent of the angle of internal friction,
  - $\gamma_c$ – the partial factor for cohesion,
  - $\gamma_\gamma$ – the partial factor for soil bulk density;
- $R$ – the factor $\gamma_{R;e}$ used for the resistance occurring on the slip surface.

The table juxtaposes the values of the partial factors recommended by Eurocode 7 to be applied in the analysis of slope stability for relevant design approaches.

### 2.2. "STRIP" METHODS ACCORDING TO EUROCODE 7

Designing in accordance with Eurocode 7 requires proving that the design effects of actions are not stronger than the relevant design resistance:

$$R_d \geq E_d \quad \text{or} \quad \frac{R_d}{E_d} \geq 1 . \tag{1}$$

Therefore, the analysis of stability, which leads to the determining of the minimal value of the safety factor, should take into account the design values of geotechnical parameters, actions and resistances obtained when the partial factors are applied.

In commonly used engineering methods of the stability analysis (the so-called "strip" methods), the rotating moment should be treated as the result of actions $M_{Ed}$, and the relevant counter-rotating moment – as the resistance against these actions $M_{Rd}$. Therefore, the stability index, as stated in Eurocode 7, is defined by the following formula:

$$F = \frac{M_{Rd}}{M_{Ed}} = \frac{\sum_{i=1}^{n} R_{ed,i}}{\sum_{i=1}^{n} (W_{d,i} + Q_{d,i}) \sin \alpha_i} \geq 1 , \tag{2}$$

where:

$R_{ed,i}$ – the design shearing resistance of the soil along the base of the $i$-th block (strip),

$\alpha_i$ – the angle of inclination of the $i$-th block's base to the level line,

$W_{d,i}$ – the design weight of the $i$-th block,

$Q_{d,i}$ – the external load on the $i$-th block.

With such an approach, the minimal stability index should not be lower than one. Condition (1) implies the approach to stability assessment that is diametrically different from the traditional one, in which the computations were carried out for characteristic values of action and soil reaction, and the required margin of stability was achieved by assuming a relatively high required value of $F_{\text{req}}$. This value, in keeping with Polish regulations, equals $F_{\text{req}} = 1.50$ for the road embankments higher than 6 meters.

The regulations of Erocode 7 introduce implicitly a condition that in the computations of stability it is not permissible to assume the lack of horizontal forces between the blocks. This means that both the popular Fellenius method (Swedish method) and the version of the Janbu method, in which only horizontal reactions between the blocks are considered, have to be excluded from stability analysis tools.

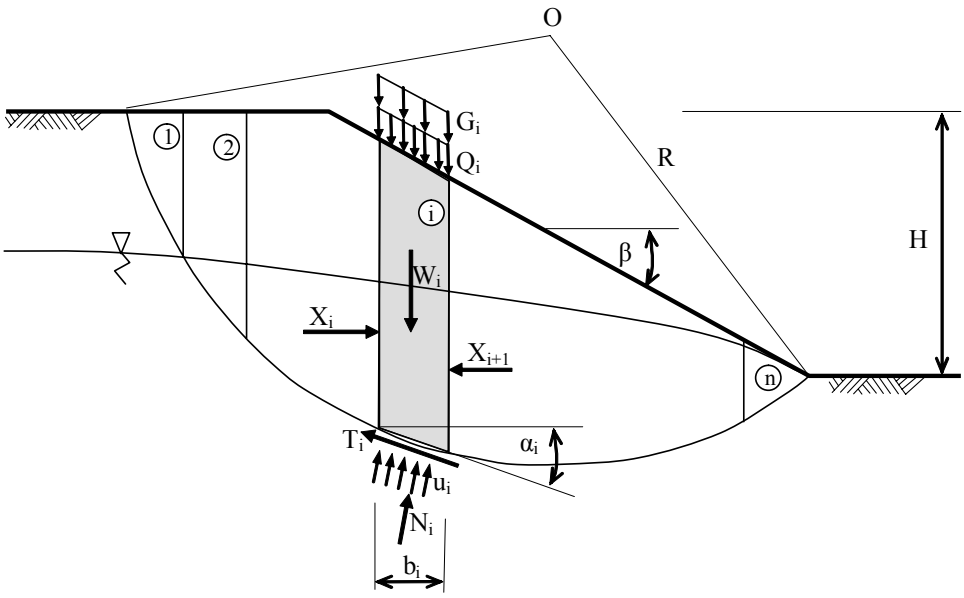


Fig. 1. Diagram of Bishop's method (simplified)

Due to the above limitation, Bishop's Routine Method (simplified) [1] has been selected for the calculations, as it fulfils the condition of the equilibrium of the moments of forces and the horizontal projections of horizontal forces. The computational scheme has been shown in figure 1. In this method, the stability index, after introducing relevant partial factors, is described by the following formula:

$$F = \frac{\sum_{i=1}^{n} \frac{\frac{1}{\gamma_{R;e}}\left[\frac{c_{k,i}b_i}{\gamma_c} + (\gamma_G W_{k,i} + \gamma_G G_{k,i} + \gamma_Q Q_{k,i} - u_{k,i}b_i)\frac{\tan\varphi_{k,i}}{\gamma_\varphi}\right]}{\left(1 + \tan\alpha_i \frac{\tan\varphi_{k,i}}{\gamma_\varphi F}\right)\cos\alpha_i}}{\sum_{i=1}^{n}\left(\gamma_G W_{k,i} + \gamma_G G_{k,i} + \gamma_Q Q_{k,i}\right)\sin\alpha_i}, \tag{3}$$

where:

$c_{k,i}$ – the characteristic value of the cohesiveness of the soil deposited at the base of the $i$-th block,

$\varphi_{k,i}$ – the characteristic value of the angle of internal friction of the soil deposited at the base of the $i$-th block,

$b_i$ – the width of the $i$-th block,

$\alpha_i$ – the angle of inclination of the $i$-th block base towards the level line,

$W_{k,i}$ – the characteristic value of the $i$-th block's weight,

$G_{k,i}$ – the characteristic value of fixed load acting on the $i$-th block,

$Q_{k,i}$ – the characteristic value of changing load acting on the $i$-th block.

The formula is generalized for the use in each of the four design approaches, in which different combinations of partial factors are used in accordance with table 1.

In Design Approach 1, Combination 1 (*DA1-1*), it is necessary to increase the values of destabilizing forces and external loads, multiplying them by relevant values of partial factors $\gamma_G$ and $\gamma_Q$, whereas the values of sustaining forces and interactions are not modified; similarly, the characteristic values of soil strength are not reduced, either.

By contrast, in Design Approach 1, Combination 2 (*DA1-2*), it is indispensable to increase the values of external loads and to reduce the values of strength parameters, dividing them by relevant values of partial factors $\gamma_\varphi$ and $\gamma_c$.

In Approach 2 (*DA2*), as in the Combination 1 of Approach 1, different partial parameters are used for sustaining and destabilizing forces and interactions, but the characteristic values of strength parameters are not decreased. It is the shearing resistance values on the slip surface that are subject to reduction. They have to be divided by the factor $\gamma_{R;e}$.

Design Approach 3 (*DA3*) is very similar to the combination 2 of Approach 1. The only difference consists in treating all the actions on the subsoil as geotechnical actions, which means that in calculations the characteristic values of external fixed loads are assumed, using $\gamma_G = 1.0$. External changing loads should be multiplied by the factor $\gamma_Q = 1.3$.

### 2.3. CARRYING OUT NUMERICAL CALCULATIONS OF SLOPE STABILITY ACCORDING TO EUROCODE 7

The Combination 1 of design Approach 1 as well as Approach 2 are truly problematic, as far as their application to numerical computations is concerned, because the calculations demand that different values of partial factors should be employed for the destabilizing and the sustaining interactions. The computer programs used in the engineering practice, as a rule, do not make it possible to apply the partial factors appropriately. A number of guidelines for designing in accordance with Eurocode 7 (e.g. [2]÷[4]) present various ways of eluding those inconveniencies.

In [2], for the Combination 1 of design Approach 1 the authors recommend that the soil bulk density should be additionally multiplied by the partial factor $\gamma_G = 1.35$, and the applied loads – by $\gamma_Q = 1.5$. On the other hand, the authors of guidelines [3] persuade us out of adopting such a methodology, arguing that the variability of strength parameters has a greater impact on the potential occurrence of slope failure than the changeability of the actions (loads).

Due to the existing limitations of computer programs, the guidelines for designing provide, for Design Approach 2, a couple of ways (different from those in Eurocode 7) of carrying out the analysis of stability. It is recommended to treat differently the favourable sustaining interactions – using $\gamma_{Gfav} = 1.0$ and the unfavourable (rotating) ones – using $\gamma_G = 1.35$.

Guidelines [2] and [3] advise $\gamma_G = 1.0$ for all the fixed actions and an "averaged" partial factor for changing loads $\gamma_{Q/G} = \gamma_Q/\gamma_G = 1.5/1.35 = 1.11$. The omitted partial factors, as far as unfavourable interactions are concerned ($\gamma_G = 1.35$ and shearing resistance on the surface $\gamma_{R;e} = 1.1$), are taken into account on the right-hand side of condition (1), thus increasing the required value of the stability index:

$$F_{\text{req}} = 1.0\gamma_G\gamma_{R;e} = 1.0 \times 1.35 \times 1.10 = 1.485.$$

Guidelines [2] offer a simpler way for Design Approach 2, recommending that the soil bulk density should be treated as a solely unfavourable action, therefore it should be multiplied by the factor $\gamma_G = 1.35$, and all the external loads – multiplied by the factor $\gamma_Q = 1.5$. The factor of shearing resistance on the surface $\gamma_{R;e} = 1.10$ is located on the right-hand side of condition (1), increasing the required value of the stability index:

$$F_{\text{req}} = 1.0\gamma_{R;e} = 1.0 \times 1.10 = 1.10.$$

The above-presented methods of dealing with the problems of numerical computations distort, however, the rules formulated in Erocode 7 and are not without significance as far as their impact on the results is concerned. In this article, the authors' own program SMB has been used, in which the assumed algorithms fully conform with the guidelines of the Combination 1 of design Approach 1 as well as Approach 2.

## 3. ANALYSIS OF ROAD EMBANKMENT STABILITY

### 3.1. DUAL CARRIAGEWAY S-8

In recent years in Poland, the infrastructure of land (road and rail) transport has been constantly modernized and extended. These actions have been taken in order to modernize the Wrocław–Syców section of a Dual Carriageway S-8 (figure 2). The works planned for the years 2009–2011 entail, among others, the construction of new road embankments at the length of 22.5 km [8]. The height of the embankment varies, reaching a maximum of 8.6 m. The assumed inclination of the embankment slopes is 1:1.5 A typical cross-section of the embankment is presented in figure 3. The conditions of embankment foundation are various [9]. The degree of the complexity of geotechnical conditions varies from a simple to a complex one. Four types of subsoil may be distinguished:

type 1 – cohesive bearing soil, surface layers of the soil consist of soils, sandy and silty clays in a firm state,

type 1a – cohesive bearing/low-bearing subsurface layers of the soil are made of clayey sands, sandy and silty clays in a soft state,

type 2 – non-cohesive bearing subsurface layers of the soil are: medium compact, fine and medium sands,

type 3 – organic non-bearing soil, subsurface layers of the soil are: peats and clayey aggregate mud of the thickness up to 2.0 m, soft and very soft.

This article takes advantage of the results obtained from the conceptual design study of carriageway location. At that time, the possibility of making the embankments of a non-cohesive soil in the form of medium sand, with a slight content of clay, being characterized by small cohesion, was considered. In total, the analysis of stability was carried out for 32 design cross-sections, which fall into the following categories, taking account of foundation conditions: subsoil type 1, 11 cross-sections; subsoil type 1a, 10 cross-sections; subsoil type 2, 4 cross-sections; subsoil type 3, 7 cross-sections.

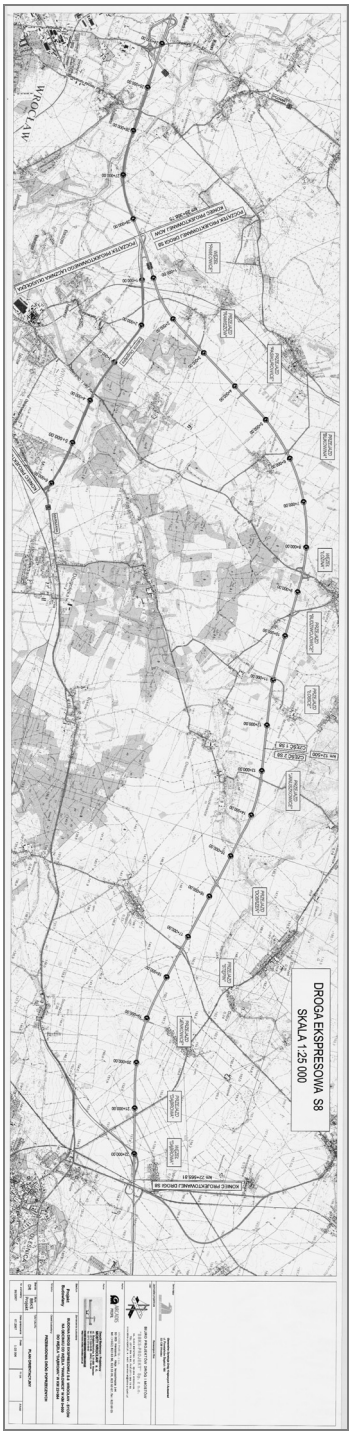


Fig. 2. The location of new embankments of Wrocław–Syców section of Dual Carriageway S-8

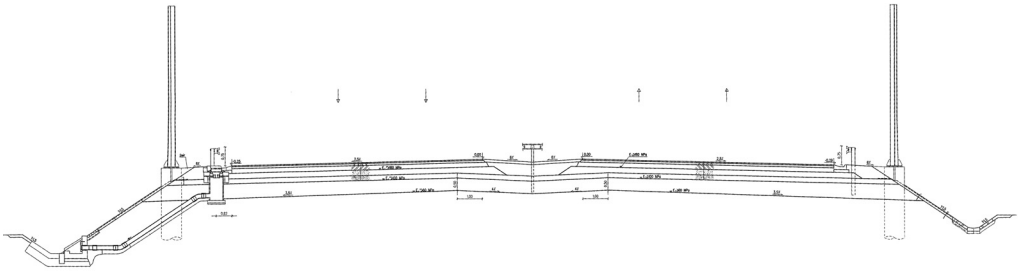

Fig. 3. A typical cross-section of road embankment

### 3.2. DISCUSSION OF STABILITY ANALYSIS RESULTS

The computations have been carried out according to the recommendations of Eurocode 7, taking into account all the four design approaches. As the required (admissible) value of the stability index, $F_{req}$ = 1.0 was assumed. For the purpose of comparison, also the traditional approach (*CA*) was taken into consideration, which takes the characteristic values of geotechnical parameters. In that case, the required value of the stability index was assumed in accordance with Polish regulations referring to the designing of road embankments, that is $F_{req}$ = 1.50 [7].

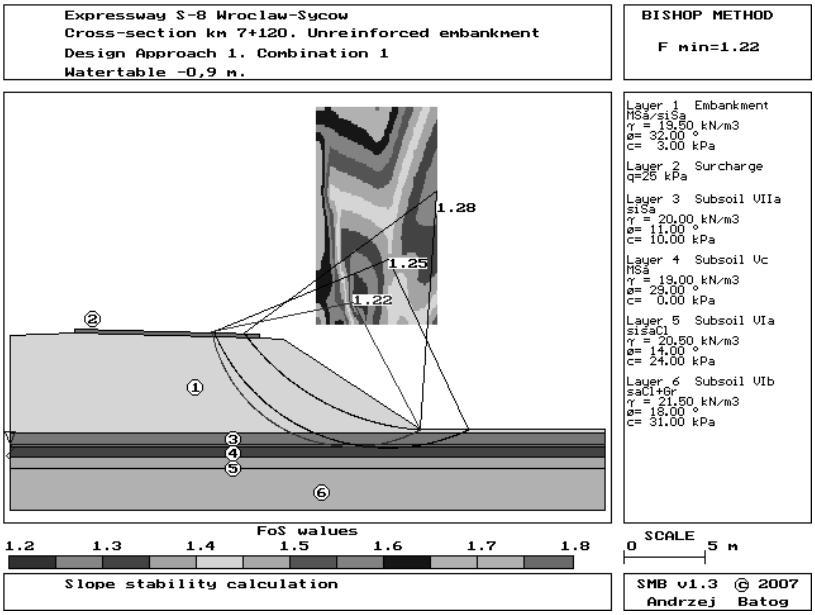


Fig. 4. The assessment of stability of the embankments of
Dual-Carriageway S-8 Wrocław–Syców in km 7+120 – Design Approach 1, Combination 1

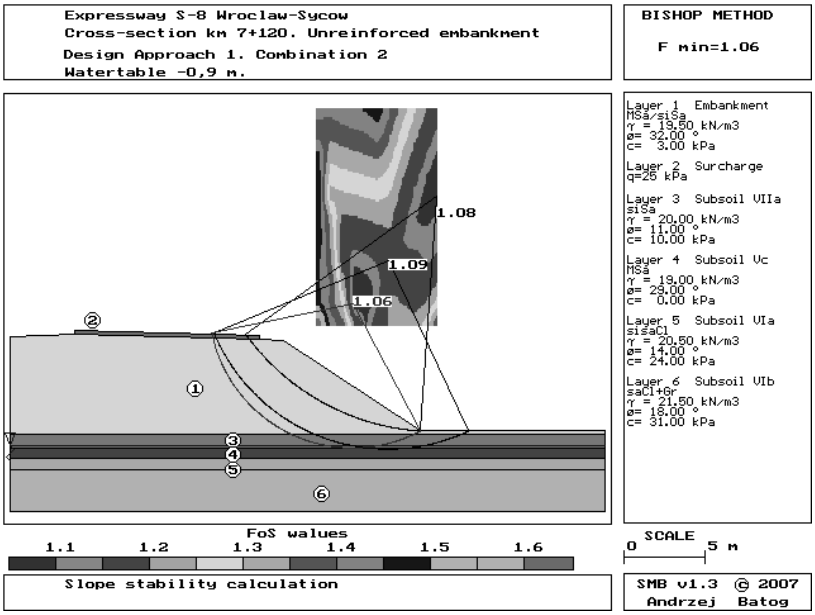


Fig. 5. The assessment of stability of the embankments of
Dual-Carriageway S-8 Wrocław–Syców in km 7+120 – Design Approach 1, Combination 2

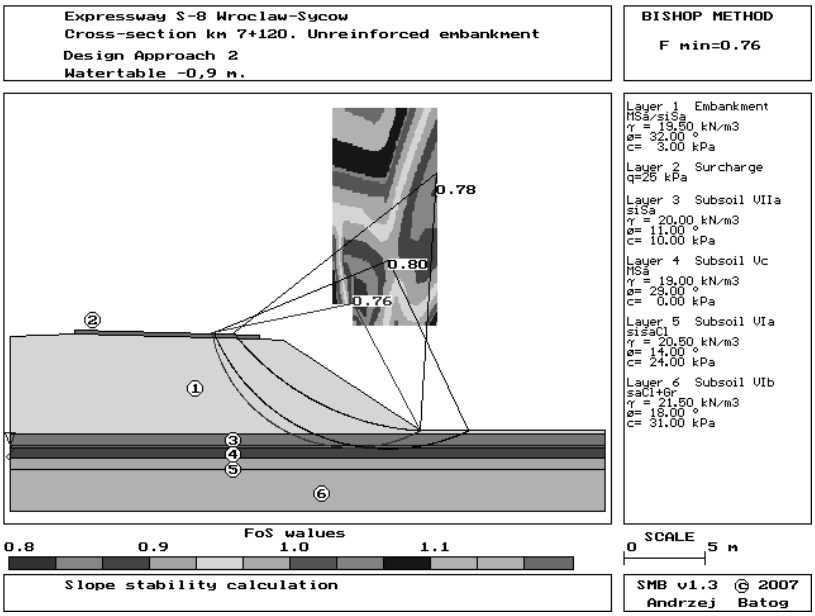


Fig. 6. The assessment of stability of the embankments of
Dual-Carriageway S-8 Wrocław–Syców in km 7+120 – Design Approach 2

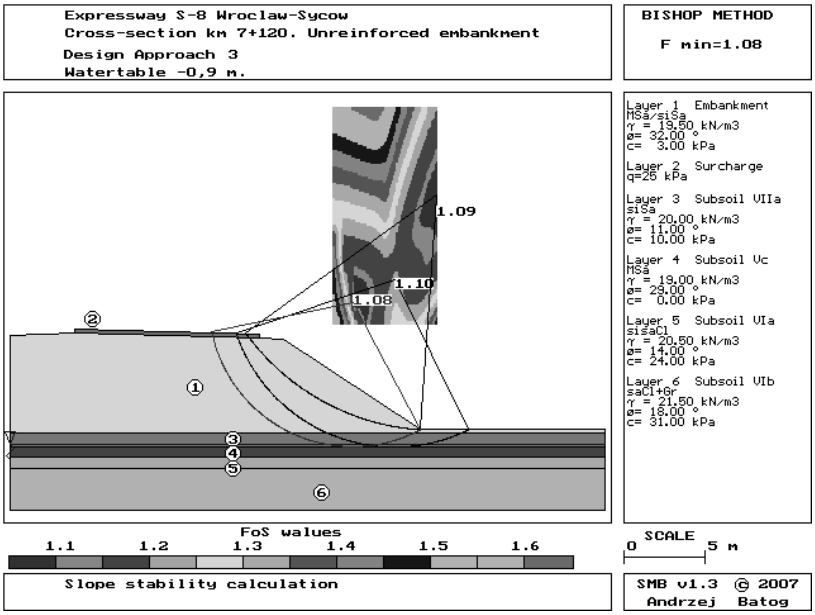


Fig. 7. The assessment of stability of the embankments of
Dual-Carriageway S-8 Wrocław–Syców in km 7+120 – Design Approach 3

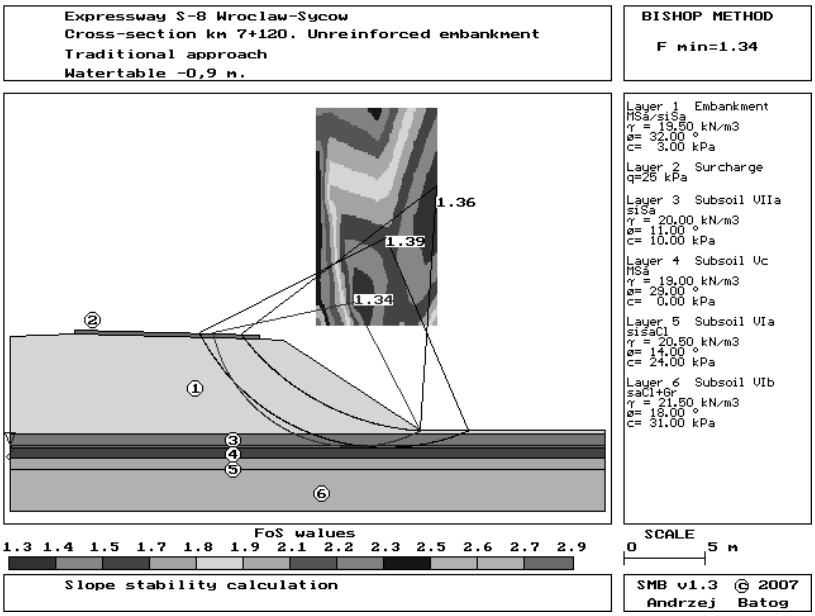


Fig. 8. The assessment of stability of the embankments of
Dual-Carriageway S-8 Wrocław–Syców in km 7+120 – traditional design approach

The results of computations were obtained after using the author's own SMB program. They are presented in the form of contour line diagram of the isolines of constant stability index values, determined inside of the given rectangular area of the location of permanent centres of a circular-cylindrical slip surface, together with the location of significant slip surfaces, including the most dangerous surface with the minimal stability index $F_{min}$.

Demonstration results of the cross-section km 7+120, obtained for each of the four design approaches, are shown in figures 4–7, and for the traditional approach – in figure 8. The description of the soils as well as the characteristic values of geotechnical parameters assumed for computations are shown on each of the figures.

Synthetic results of the computations in each of the four Eurocode 7 design approaches are collected in figures 9–12. The diagrams present the interdependence of the minimal value of the stability index $F_{min}$ in a given design cross-section on the embankment height. For the purpose of comparison, figure 13 shows the results of the traditional design approach that assumes characteristic values of the parameters. Particular series of data include the specified soil types.

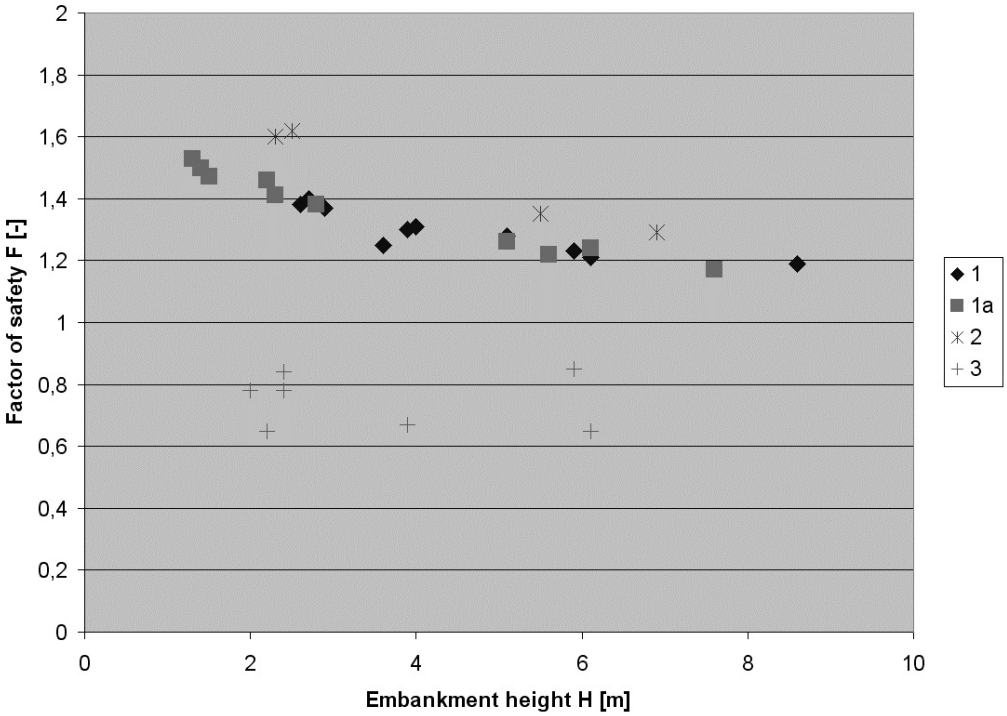


Fig. 9. Design Approach 1, Combination 1 – the results of the embankment stability computations for particular soil types: 1 – firm cohesive soils, 1a – mainly soft cohesive soils, less frequently – firm, 2 – non-cohesive soils, 3 – non-bearing organic soils

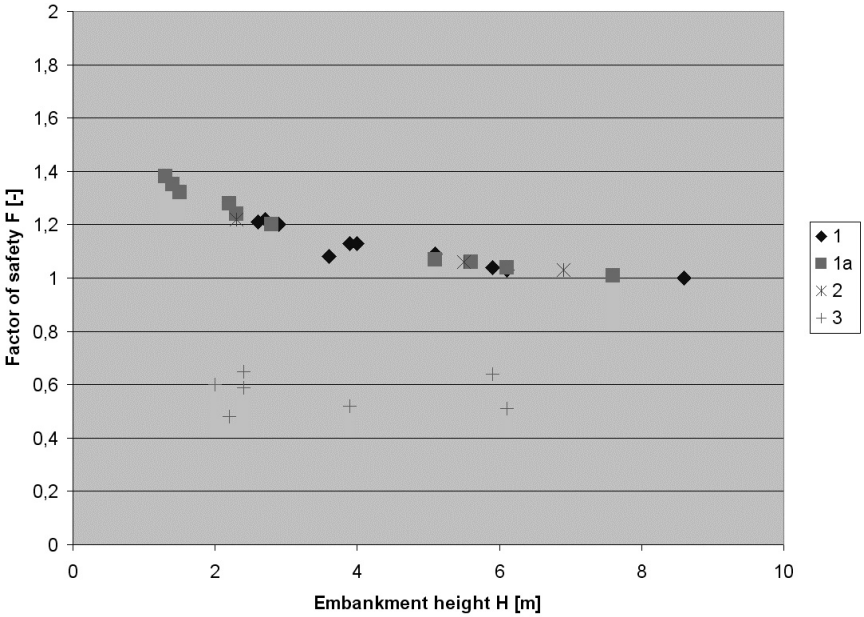


Fig. 10. Design Approach 1, Combination 2 – the results of embankment stability computations for particular soil types

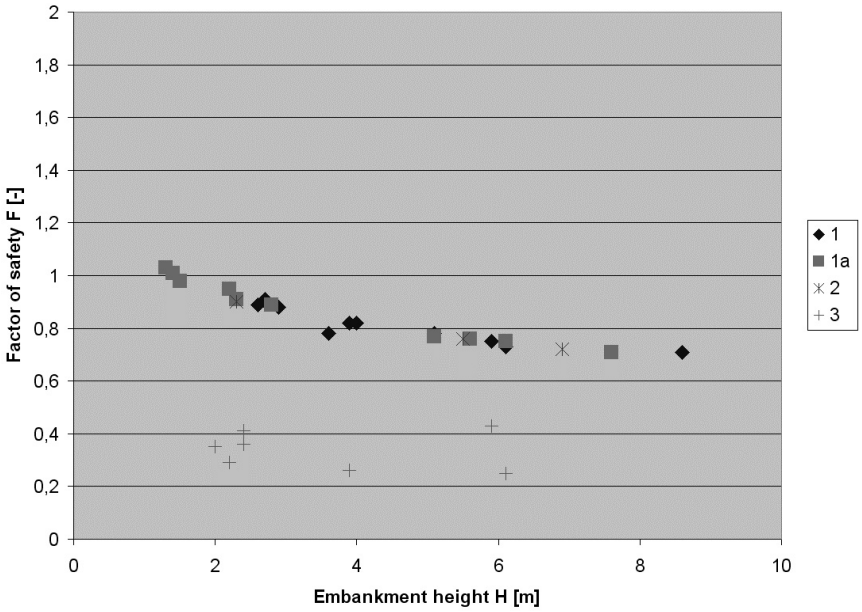


Fig. 11. Design Approach 2 – the results of embankment stability computations for particular soil types

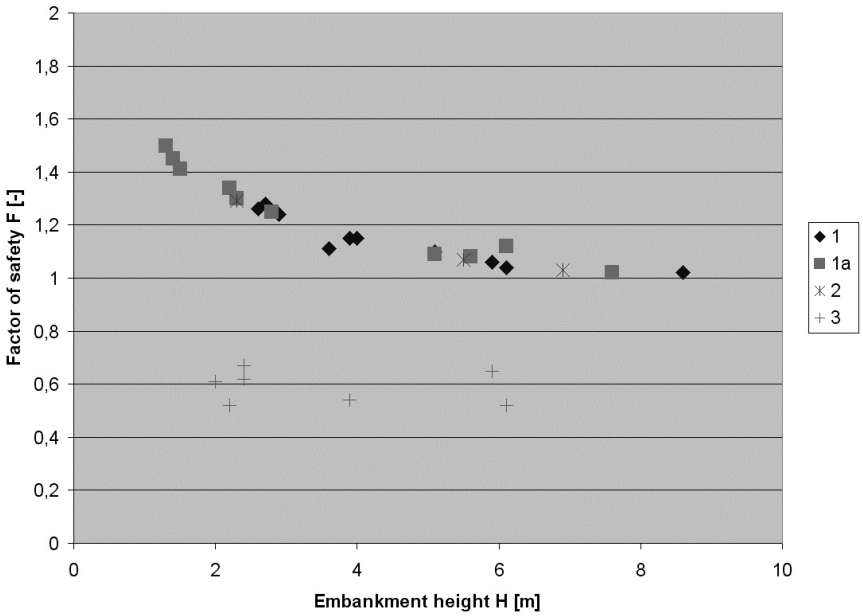


Fig. 12. Design Approach 3 – the results of embankment stability computations for particular soil types

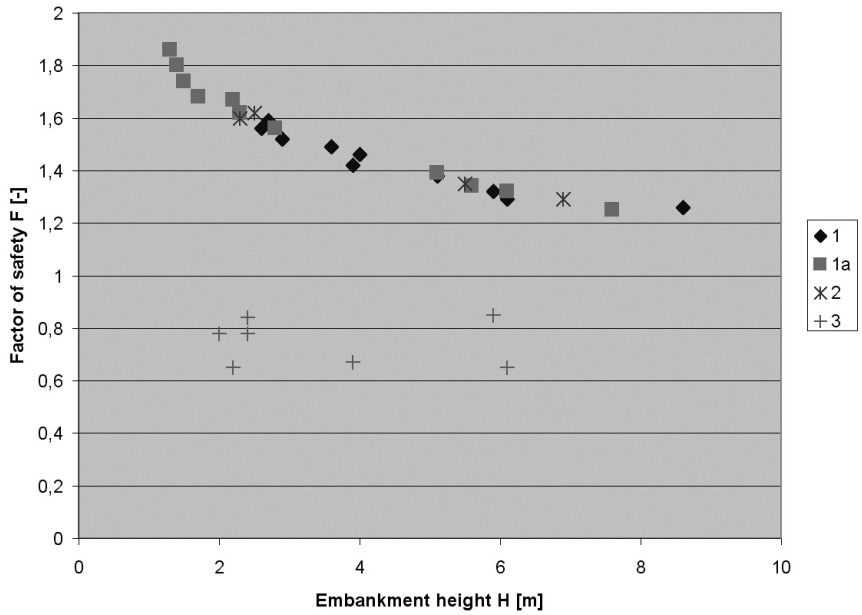


Fig. 13. Traditional design approach – the results of embankment stability computations for particular soil types

The results obtained in all of the approaches, in the cross-sections in which the subsoil has a sufficient load-bearing capacity (soil types 1, 1a and 2), exhibit a clear dependence of the embankment stability on its height. The points representing the calculated values of $F_{\min}$ form an exponential curve, which should be ascribed mainly to the cohesion of the embankment soil and subsoil. The scarps of the embankment whose height exceeds 7.0 m do not show any distinct decrease of the stability index value in relation to further increase of the embankment height. The high embankments, comparable with respect to soil conditions, have the stability margin by about 20% lower compared with that of the lower embankments.

As may be seen in figure 9, the manner the partial factors are assumed in the Combination 1 of Design Approach 1 "favours" the scarps of the embankments founded on non-cohesive soil (type 2). Minimal stability indices are clearly located above the trend line (for the sake of the diagram clarity, the line in question has not been drawn in the figure), showing a wider stability margin than that in the cross-sections founded on the subsoil consisting of the cohesive soil (types 1 and 1a).

A separate group of results allows the stability assessment of the embankments designed on a low-bearing subsoil (type 3). The results are distributed in a chaotic way; the stability of the embankments depends only on the thickness of the low-bearing soil and its strength parameters. The main problem to be solved in designing embankment in those cross-sections is how to ensure subsoil bearing capacity.

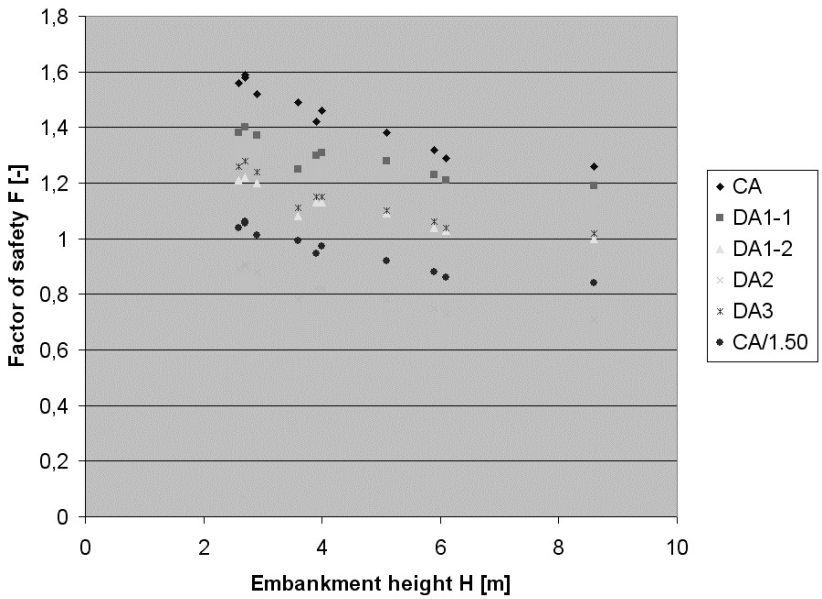


Fig. 14. The comparison of the results of stability computations in cross-sections of the embankment founded on firm cohesive soil (type 1), employing particular design approaches, including the traditional one (*CA* – Classical Approach)

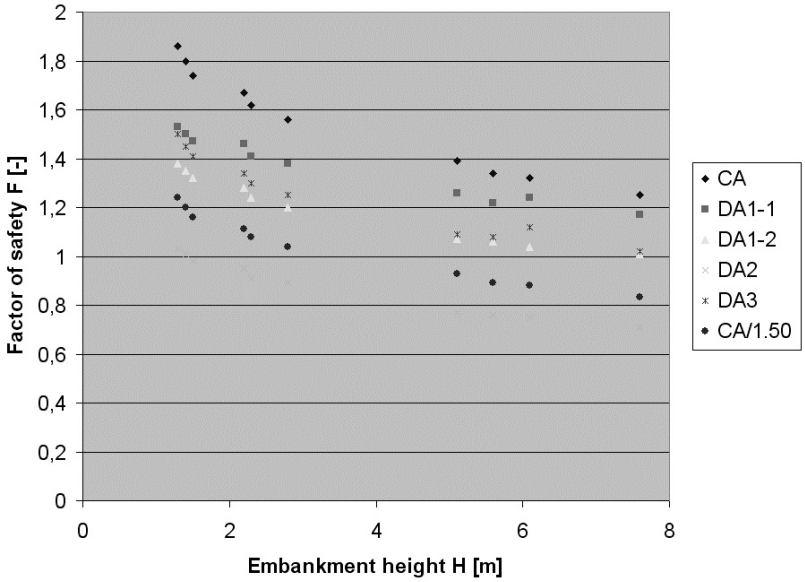


Fig. 15. The comparison of the results of stability computations in cross-sections of the embankment founded on soft cohesive soil (type 1a), employing the design approaches in question

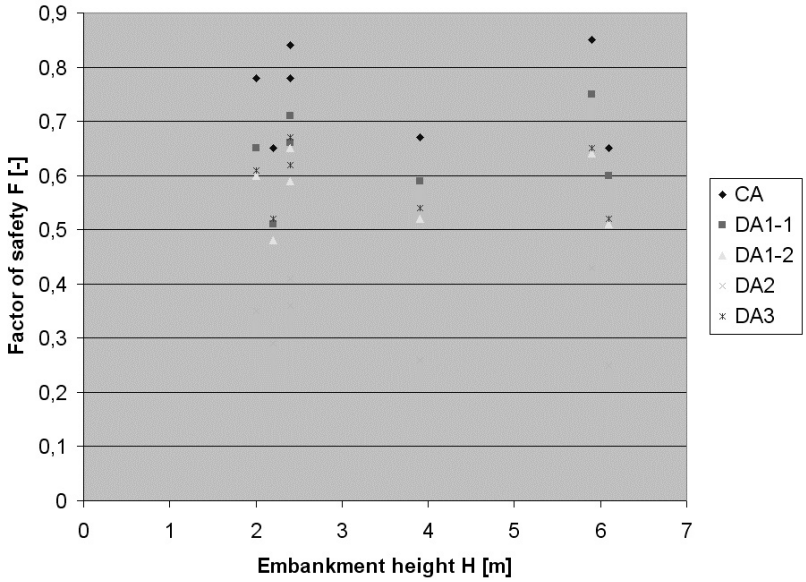


Fig. 16. The comparison of the results of stability computations in cross-sections of the embankment founded on organic, non-cohesive soil (type 3), employing the design approaches in question

In figures 14–16, the results obtained for separate soil types are collected as they seem comparable. Particular series include the results obtained from the design approaches in question and the traditional approach. It has to be noticed that the comparison of the results of Eurocode 7 Design Approaches with those of the classical approach may be misleading, due to the differences in the required stability margins. In the design approaches of Eurocode 7, the minimal stability index ought to be greater than one, whereas in the traditional approach the demanded stability margin results from relevant regulations. In Poland, the stability index $F_{\text{ad.}}$ required for the road embankments higher than 5.0 m, as described by the standards, equals 1.50. In other European countries, the obligatory stability index $F_{\text{ad.}}$ ranges from 1.30 to 1.50. That is why the traditional approach additionally provides the values of an auxiliary factor, named *ODF* (over-design factor), determined by the following formula:

$$ODF = \frac{F_{\min}}{F_{\text{req}}}. \tag{4}$$

*ODF* values > 1 signify the stability margin that is wider than required. In figures 14–15, the series of *ODF* results in the traditional approach were marked by the symbol *CA*/1.50.

The comparison of the results obtained clearly points to the fact that in the analysis of road embankment stability, the separate design approaches are not equivalent. Maximum differences between the extreme results obtained for *DA1 C1* and *DA2* amount to 60% for *DA2* value. Therefore, the selection of an appropriate design approach to a specific problem should be preceded by an insightful analysis of geotechnical conditions, taking into account, among others, geotechnical category, the complexity of geotechnical conditions, as well as the degree of subsoil investigation thoroughness.

The safest approach is *DA2*, allowing the lowest values of stability index to be obtained. Therefore, it should be applied in the cases of rough investigation of the subsoil conditions, when the soil types vary significantly in the analyzed soil if or when the embankment is uncompacted. This approach is also appropriate when the values of stability parameters are determined by means of indirect methods, for example, solely on the basis of correlative relationships.

Intermediate results, resembling one another, are obtained via approaches *DA1-2* and *DA3*. They should be, therefore, applied in the stability analysis of the slopes in which the level of geotechnical condition recognition is medium, and the values of strength parameters have been partially determined in tests (for example, in a direct shear apparatus). Approaches *DA1-2* and *DA3* differ only in the way they treat external load. Approach *DA3* is more suitable in the cases where the external loads are fixed or they change in a long time (e.g., end slopes of excavations or dumping grounds). In turn approach *DA1-2* is more relevant when the external loads are both changeable and relatively large (e.g., in the analysis of the slope stability of railway embankments).

The highest values of stability factors are obtained in approach *DA1-1*, in which, importantly, the stability analysis is based only on the characteristic values of strength parameters. This approach should be selected only in the case where the values of the soil strength parameters were determined in laboratory tests and field tests, ensuring a large degree of thoroughness of investigating geotechnical conditions with respect to the whole soil mass analyzed.

Diagrams 14–16 provide, for the purpose of comparison, the values of stability indices in the classical approach (*CA*), including the characteristic values of all the parameters and loads. The obtained values of stability indices are greater than the ones obtained from Eurocode 7 design approaches. There are considerable differences between stability index values determined in the traditional approach *CA* and the values obtained in separate approaches of Eurocode 7. Those differences represent a stability margin caused by a particular combination of partial factors recommended in a given approach.

It is also necessary to analyze the results of Eurocode 7 stability assessment with respect to its conformity with the criteria used so far in engineering practice, resulting from the stability margin defined in the regulations – $F_{req} = 1.50$. That is why the diagrams in figures 13 and 14 present the values of over-design factor *ODS* (4) calculated in the traditional approach (denoted by the symbol *CA*/1.5). They may serve as the point of reference to the values of stability indices determined in particular design approaches, in which the required value of stability factor $F_{req}$ equals 1.0. The conclusion drawn from the comparison is that only design approach *DA2* makes it possible to obtain the values not greater than (and thus safer) the *ODS* values. For that reason, only design approach 2 (*DA2*) meets the requirements of road embankment stability described in Polish regulations.

## 4. CONCLUSIONS

The assessment of slope and scarp stability is indispensable for the evaluation of their safe maintenance. The value of the basic parameter of stability analysis– the stability index – may be diverse for the same problem, depending on the method applied. The results of the solutions based on FEM have a considerably greater scope than those obtained in the block (stripe) method, because, apart from stability factor, they also include data referring to the distribution of stress, deformation, pore pressures and the extent of softening zones. Nonetheless, only in the case of block methods, the theorems derived for limit load capacity may be applied. However, concerning the stability factor calculated from the solutions using FEM, such evaluation is difficult to make.

Eurocode 7 introduces new approaches to the issue of solving engineering problems in geotechnics. The analysis and discussion of those design approaches, pre-

sented in this article, are based on the examples drawn from engineering practice. The authors have proven that the separate approaches are not equivalent. Their selection must be linked with the program of geotechnical investigations chosen for a given investment and relevant to the degree of geotechnical conditions recognition.

## REFERENCES

[1] BISHOP A.W., *The use of the slip circle in the stability analysis of slopes*, Geotechnique, 1955, No. 5, 7–17.

[2] BOND A., HARRIS A., *Decoding Eurocode 7*, Taylor & Francis Group, London, 2008.

[3] FRANK R. et al., *Designers' guide to EN 1997-1: Eurocode 7*, Thomas Telford, London, 2004.

[4] SIMPSON B., DRISCOLL R., *Eurocode 7 a commentary*, CRC Ltd., London, 1998.

[5] STILGER-SZYDŁO E., *Posadowienia budowli infrastruktury transportu lądowego. Teoria – Projektowanie – Realizacja*, Wrocław, Dolnośląskie Wydawnictwo Edukacyjne, 2005.

[6] EN 1997-1:2004 *Eurocode 7. Geotechnical Designing.* Part 1. *General rules*.

[7] The Decree of the Minister of Transportation and Water Management regarding technical conditions required of public roads and their location. Dz. U. Nr 43/1999 r.

[8] *Construction design: the construction of Dual Carriageway S-8 Wrocław-Syców on the section from "Pawłowice" junction at km 0+000 to "Dąbrowa" junction at km 22+564. Longitudinal profiles in the scale of 1:100/1000 and structural cross-sections of Dual Carraigeway S-8 embankment, in the scale of 1:50*, The Office of Road and Bridge Designing "BBKS-PROJEKT" Sp. z o.o. in Wrocław, Wrocław, July 2007.

[9] Documentation charts of the boreholes of exploratory drillings, GEOTECH Sp. z o.o. – Geological and Designing Services for Civil Engineering and Environment Protection in Rzeszów, January 2007.