Studia Geotechnica et Mechanica, Vol. XXXI, No. 3, 2009

HYDRAULIC CONDITIONS OF WATER FLOW IN RIVER MOUTH

ZYGMUNT MEYER

West Pomeranian University of Technology, Szczecin, Poland

Abstract: The outlet distance of river is the area at growing broad at the river cross section and small slope of free surface. Additionally the river mouth is under strong influence of sea surges and wind action. The rising up sea level produces backwater curve upstream the river and the wind blowing opposite to the main flow direction produces wind shear stress at the free water surface. Bath: wind and surges change the relation river flow-depth. The paper give theoretical consideration at the phenomenon and the practical engineering relations which can be used for calculations. The presented research leads to the conclusion that the wind backwater curve in the case of lower Odra River can reach the distance up to 90 km upstream.

Streszczenie: Ujście rzeczne jest miejscem, gdzie naturalne warunki przepływu ulegają zaburzaniu, czego przyczyną są zarówno wahania stanów wody w morzu, które wywołują spiętrzenia cofkowe, jak i wiatr. Naprężenia wiatrowe na powierzchni wody, działające przeciwnie do kierunku ruchu wody, w istotny sposób mogą zmienić tachoidę. Gdy spadek zwierciadła wody w rzece jest mały, co w ujściowym odcinku występuje szczególnie często, spiętrzenia wody przez wiatr mogą być znaczące. Co więcej, w ujściu rzeki duże zmiany w przekroju poprzecznym koryta powodują dodatkowe zmiany energetyczne strumienia wody i wpływają również na położenie zwierciadła wody.

W pracy przedstawiono analityczny opis wymienionych elementów i ich wpływ na kształtowanie się pionowego rozkładu prędkości wody w rzece. Do opisu pionowego przenoszenia pędu i kształtu tachoidy wykorzystano hipotezę Boussinesqua. Przeanalizowano dwa powszechnie stosowane opisy współczynnika lepkości burzliwej wody i efekt tego założenia na przepływ. Okazuje się, że każdy z tych opisów prowadzi do przepływów, które w tych samych warunkach znacząco się różnią.

Резюме: Устье реки это место, где природные условия течения воды подвергаются возмущению, чего пичиной являются как колебания уровня морской воды, которые вызывают подпорный водоподъем, так и ветер. Напряжения на поверхности воды, вызванные ветром, действующие противоположно к направлению течения воды, существеным образом могут изменить тахоиду. Когда понижение уровня воды является малым, что вблизи устья выступает очень часто, водоподъемы, вызванные ветром могут быть значимы. Кроме того в устье реки большие колебания поперечного сечения русла вызывают добавочные энергетические изменения потока воды и влияют на расположение уровня воды.

В настоящей работе представлено аналитическое описание вышеуказанных элементов, и их влияние на образование вертикального распределения скорости течения воды в реке. Для описания вертикальной передачи количества движения и формы тахоиды была использована гипотеза Буссинеска. Был проведен анализ двух общепринятых описаний коэффициента турбулентной вязкости воды и влияние этой предпосылки на течение. Оказывается, что каждое из этих описаний ведет к течениям, которые при сходных условиях в значительной степени отличаются.

1. INTRODUCTION

River mouth is an area where the classical description: depth-flow in river bed fails. At the river mouth, usually the river cross-section area increases and free water

Fig. 1. The map of Odra River catchments [Atlas geograficzny Polski 2007]

table slope diminishes. We observe there the backwater curve effects and because of very small slope, at the free water surface wind shear stress plays important role. The wind blowing opposite to the flow direction can create backward currents changing significantly the vertical distribution of water velocity (tachoida). The depth averaged velocity in river is also slow down so it affects the sediment transport especially at the bottom. The change of sediment composition at the bottom implies further roughness changes (e.q. roughness coefficient by Maning).

All those phenomena can be observed in the Lower Odra River [1]–[3], [9], [11]–[15]. The free water table slope on this distance reaches 10^{-5}, the river width about couple of kilometers and the depth averaged velocity drops down to 0.15–0.20 m/s.

Additionally at the Lower Odra River we observe barotrophic waves generated by atmospheric pressure changes and see surges due to the wind which also affect the flow in the river mouth [12], 13]. In the Lower Odra River there is also observed salt

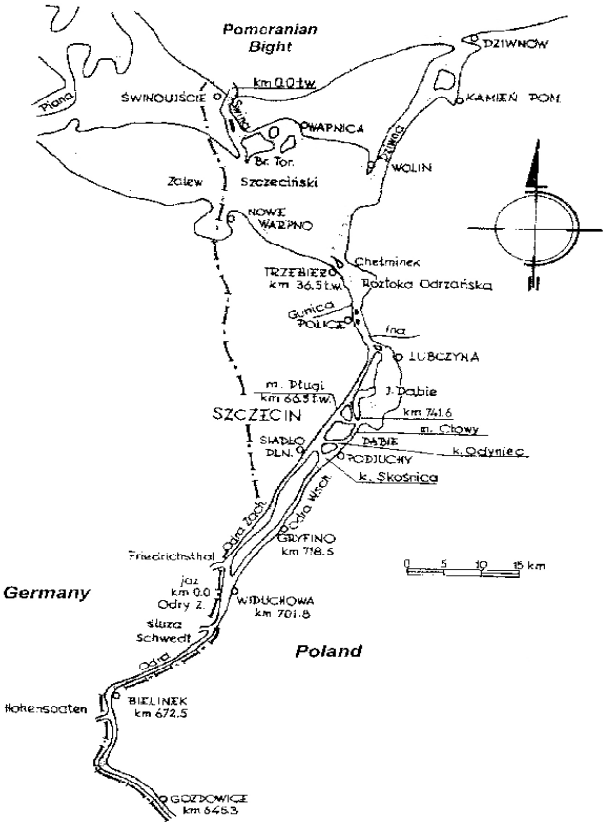

Fig. 2. Odra River outlet [Coufal 2]

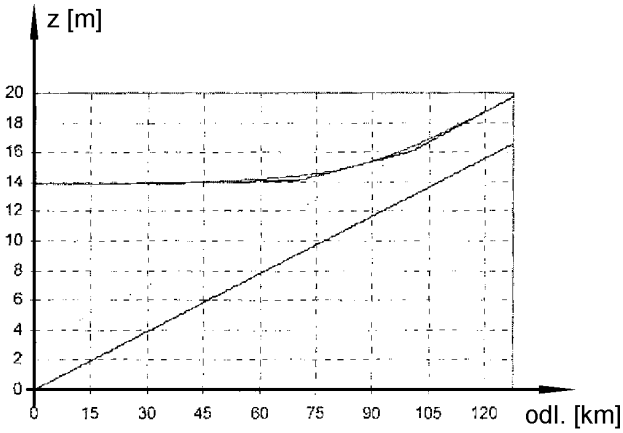

Fig. 3. Wind backwater curve in Odra River mouth [Libront 3]

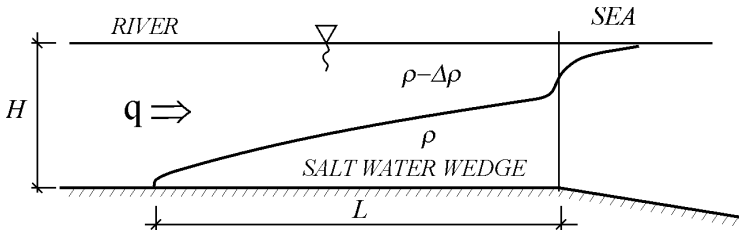

Fig. 4. Sal water wedge penetrating upstream [Meyer 3]

water wedge penetrating upstream the river [15]. In this paper the presentation of the phenomenon appearing in Lower Odra River is limited and does not cover: sediment stream analysis, barotrophic wave propagation and salt water wedge penetration upstream. They are presented in previous papers [12], [13], [15].

2. MATHEMATICAL DESCRIPTION OF PROBLEM

2.1. BASIS EQUATION OF MOTION

For the analysis of the water flow in the river mouth area two dimensional vertically plane model, was applied.

The basic system of coordinates was chosen in this way that y – axe is directed vertically upward and the x – axe is horizontal [4]–[10], see Fig. 5.

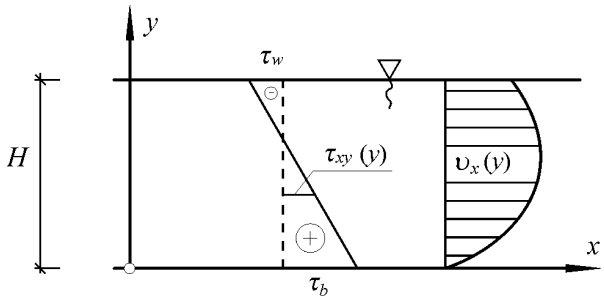

Fig. 5. Scheme of flow applied for analysis

The basic equation of motion were chosen as follows [1], [6], [17]:

$$\frac{dV_x}{dt} = X - \frac{1}{\rho}\cdot\frac{\partial p}{\partial x} + \frac{\partial}{\partial x}(\tau_{xx}) + \frac{\partial}{\partial y}(\tau_{xy}) \,, \tag{1}$$

$$\frac{dV_y}{dt} = Y - \frac{1}{\rho} \cdot \frac{\partial p}{\partial y} + \frac{\partial}{\partial x}(\tau_{yx}) + \frac{\partial}{\partial y}(\tau_{yy}) . \tag{2}$$

In the above equations following symbols are used: H – the water depth, V_x and V_y – the water velocity components in direction x and y respectively, p – atmospheric pressure, t – time, τ_{ij} – turbulent shear stress components, τ_b – shear stress at the river bottom, τ_w – shear stress at the free water surface, ρ – water density, X, Y – the unit mass forces.

The continuity of flow is expressed as

$$div\, V = 0 . \tag{3}$$

We differentiate: equations (1); $\frac{\partial}{\partial y}$ and equation (2); $\frac{\partial}{\partial x}$ and then subtract them from each other. It gives

$$\frac{\partial}{\partial y}\left(\frac{dV_x}{dt}\right) - \frac{\partial}{\partial x}\left(\frac{dV_y}{dt}\right) = \frac{\partial^2 \tau_{xx}}{\partial x \partial y} + \frac{\partial^2 \tau_{xy}}{\partial y^2} - \frac{\partial^2 \tau_{xy}}{\partial x^2} - \frac{\partial^2 \tau_{yy}}{\partial x \partial y} . \tag{4}$$

In eq. (4) it was assumed that: the unit mass forces X and Y have a potential, water density vertical changes can be neglected, and that the atmospheric pressure does not very. If we referee eq. (4) to the asymptotic case for steady flow, we have then:

$$\text{for} \quad x \to \infty \quad \frac{\partial^2 \tau_{xy}}{\partial y^2} = 0 . \tag{5}$$

Assuming the boundary conditions shown in Fig. 5 we have:

$$\text{for} \quad y = 0 ; \quad \tau_{xy} = \tau_b$$

and

$$\text{for} \quad y = H ; \quad \tau_{xy} = -\tau_w . \tag{6}$$

The vertical distribution of the $\tau_{xy}(X)$ component of turbulent shear stress after solving eq. (5) takes form:

$$\tau_{xy}(y) = \tau_b - (\tau_w + \tau_b) \cdot \frac{y}{H} . \tag{7}$$

This equation in the further part of the paper will be used for description of tachoida problem. The second basic equation refers to energy changes in the flowing stream. We denote V_0, as the mean depth averaged velocity:

$$\upsilon_0 = \frac{1}{H} \int_0^H V_x(y) dy . \tag{8}$$

And according to Saint-Venant depth averaged stream energy procedure we have

$$\frac{1}{H}\int_0^H \frac{dV_x}{dt}\cdot dy = \frac{\partial}{\partial x}\left(\frac{\alpha\cdot V_0^2}{2}\right), \tag{9}$$

where α – is the Saint-Venant coefficient [17].

The integration in vertical direction of the unit mass force and pressure give:

$$X - \frac{1}{\rho}\cdot\frac{\partial p}{\partial x} = g\frac{\partial}{\partial x}(Rz), \tag{10}$$

where: Rz – denotes the free water surface level referred to the datum level, g – is the acceleration due to the gravity. The τ_{xx} component of the turbulent shear stress is taken according to the earlier works [14] in the following form:

$$\tau_{xx} = 2\cdot\kappa\cdot\rho\cdot H\cdot V_0\cdot\frac{\partial V_0}{\partial x} \tag{11}$$

and it gives:

$$\frac{\partial\tau_{xx}}{\partial x} = \kappa\cdot\rho\cdot H\cdot\frac{\partial^2(V_0^2)}{\partial x^2}. \tag{12}$$

In the above equations the value of κ denotes dimensionless parameter [14].

The last term in eq. (1) is integrated as:

$$\frac{1}{H}\int_0^H \frac{\partial\tau_{xy}}{\partial y}dy = \frac{\tau_w+\tau_b}{\rho H}. \tag{13}$$

Taking all the above results, i.e. eqs. (8)–(13), the basic formula takes the final form:

$$\alpha\frac{\partial}{\partial x}\left(\frac{V_0^2}{2g}\right) = -\frac{\partial Rz}{\partial x} + \kappa H\frac{\partial^2}{\partial x^2}\left(\frac{V_0^2}{2g}\right) - \frac{\tau_w+\tau_b}{\rho g H}. \tag{14}$$

The above equation describes the steady non uniform flow in river mouth including following facts: varying river cross-section area and wind shear stress acting at the free water surface.

To solve the equation (14) it needs further to describe the terms τ_w and τ_b. It needs to solve then the problem of vertical distribution of velocity in river i.e. tachoida problem.

2.2. ANALYSIS OF TACHOIDA PROBLEM

Vertical distribution of water velocity in river in literature [16], [17] is named tachoida (Fig. 6).

The basic equations describing tachoida are: vertical distribution of turbulent shear stress component $\tau_{xy}(y)$ and the Boussinesq hypothesis describing eddy viscosity coefficient influence [16], [17].

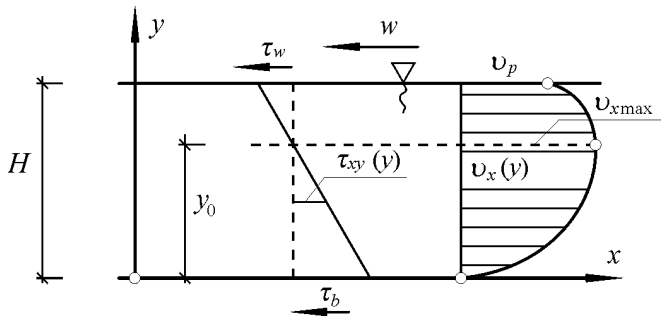

Fig. 6. Flow factors in tachoida equation

The distribution of the τ_{xy} component of turbulent shear stress was assumed according to the eq. (7), i.e. linear. This form of distribution has been confirmed in many researches [4]–[10]. However the problem is still being investigated.

So we have

$$\tau_{xy}(y) = \rho K(y)\frac{dV_x(y)}{dy}, \tag{15}$$

where: $K(y)$ – is the eddy viscosity coefficient. If we put the relationship (15) to the eq. (7) it gives the basic formula for tachoida

$$V_x(y) = \int \frac{\tau_b - (\tau_b + \tau_w)\dfrac{y}{H}}{\rho K(y)} dy + \text{const}. \tag{16}$$

To solve the above equation of tachoida it needs to describe the eddy viscosity coefficient $K(y)$. In literature, there are presented several models, among them the Prandtl distribution [16], Meyer [2009] and that one assuming constant eddy viscosity coefficient.

Prandtl model has never been applied for the case when wind action occurs at the free water surface. Sometimes exponential function is applied; as the system reaction for the unknown extortion [5], [6]. The detailed analysis of the eddy viscosity coeffi-

cient is not the aim of the present paper. To simplify calculations and to show the wind influence the constant eddy viscosity coefficient was applied:

$$K(y) = \text{const} = K\,. \tag{17}$$

Additionally the boundary condition at the bottom was applied

$$\text{for } y = 0;\ \ V_x(y) = 0\,. \tag{18}$$

Including assumptions (17) and (18) we obtain the solution of tachoida equation as follows:

$$V_x(y) = \frac{\tau_b}{\rho K} y - \frac{1}{2}\frac{y^2}{H}\frac{\tau_b + \tau_w}{\rho K}\,. \tag{19}$$

That is the second order polynomial and for the case with no wind shear stress $\tau_w = 0$ it turns to the known in literature tachoida of Bazin [16]. In the Figure 7 examples of the curves given by eq. (19) are presented:

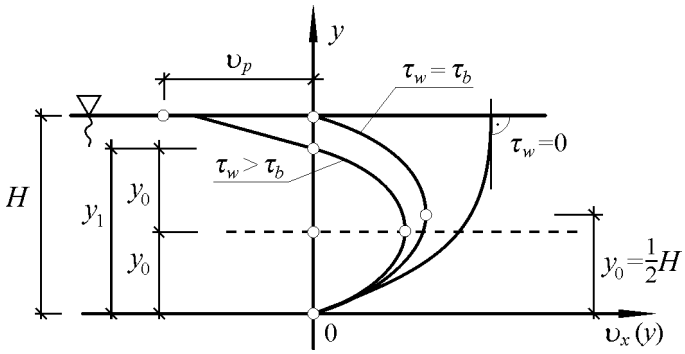

Fig. 7. Shape of tachoida curve for different τ_w

The location of the point $V_{x\,\max}$ can be obtained from following relations:

$$y_0 = \frac{\tau_b}{\tau_b + \tau_w} H\,, \tag{20}$$

$$V_{x\max} = \frac{1}{2}\frac{H\tau_b^2}{\rho K(\tau_w + \tau_b)}\,. \tag{21}$$

It is also possible to find the place y_1 where velocity $V_x = 0$. It gives:

$$y_1 = \frac{2\tau_b}{\tau_b + \tau_w} H\,. \tag{22}$$

Additionally, the depth averaged velocity according to the eq. (8) gives

$$V_0 = \frac{1}{H}\int_0^H V_x(y)dy = \frac{1}{6}H\frac{2\tau_b - \tau_w}{\rho K}. \tag{23}$$

The velocity at the free water surface from eq. (19) comes to

$$V_p = \frac{1}{2}H\frac{\tau_b - \tau_w}{\rho K}. \tag{24}$$

If the wind blowing opposite to the main flow causes surface back current its discharge can be estimated as:

$$q_1 = \int_{y_1}^{H} V_x(y)\,dy \tag{25}$$

and the main flow

$$q_2 = \int_0^{y_1} V_x(y)\,dy. \tag{26}$$

After calculations it gives:

$$q_1 = \frac{1}{12}\frac{H^2(\tau_w + 2\tau_b)}{\rho K}\left(\frac{\tau_b - \tau_w}{\tau_b + \tau_w}\right)^2, \tag{27}$$

$$q_2 = \frac{1}{3}\frac{H^2\tau_b^3}{\rho K(\tau_b + \tau_w)^2}. \tag{28}$$

Further analysis of the flow needs description of the eddy viscosity coefficient K as a function of flow parameters. According to the literature [4]–[10], [16], [17] usually it is assumed that the coefficient is referred to the shear velocity or to the depth averaged velocity. So we have:

$$K = K_1 = \kappa_1 u_* H, \tag{29}$$

where: u_* – is the shear velocity and κ_1 = const is a coefficient.

It is also very often used:

$$K = K_2 = \kappa_2 V_0 H. \tag{30}$$

The parameter κ_2 = const is a coefficient which has to be determined.

Each of the above description of the eddy viscosity coefficient leads to different tachoida. In the case of the uniform flow we have:

$$\tau_w + \tau_b = \rho g H I_b \,, \tag{31}$$

where I – is the river bottom slope. In the case of no wind we have:

$$\tau_b = \rho u_*^2 \,. \tag{32}$$

The coefficients: κ_1 and κ_2 can be determined in the case $\tau_w = 0$ and using Chezy formula.

It gives:

– for the case 1

$$\kappa_1 = \frac{\sqrt{g}}{3C} \,, \tag{33}$$

– for case 2

$$\kappa_2 = \frac{g}{3C^2} \,. \tag{34}$$

In the above equations the value C denotes velocity constant for Chezy equation. It is also possible to obtain relations for the mean (depth averaged) flow velocity.

We have:

– for case 1

$$2\sqrt{\frac{\tau_b^2}{\rho}} = 3\kappa_1 V_{01} + \sqrt{9\kappa_1^2 V_{01}^2 + 2\frac{\tau_w}{\rho}} \,, \tag{35}$$

– for case 2

$$6\kappa_2 V_{02}^2 \rho = 2\tau_b - \tau_w \,. \tag{36}$$

To compare the results given in eqs. (35) and (36) it is convenient to introduce the wind shear effect, putting following parameter ξ,

$$\xi = \frac{\tau_w}{\rho g H I_b} \,. \tag{37}$$

So it comes to:
– in the case 1

$$V_{01} = C\sqrt{HI_b}\left[\sqrt{1-\xi} - \frac{1}{2}\frac{\xi}{\sqrt{1-\xi}}\right] = C\sqrt{HI_b}\cdot f_1(\xi)\,, \tag{38}$$

– in the case 2

$$V_{02} = C\sqrt{HI_b}\cdot\left[\sqrt{1-\xi} - \frac{3}{2}\xi\right] = C\sqrt{HI_b}\; f_2(\xi)\,. \tag{39}$$

In the Table 1, there are given the values of $f_1(\xi)$; $f_2(\xi)$ and also the ratio:

$$\frac{V_{01}}{V_{02}} = \eta(\xi) = \frac{\sqrt{1-\xi} - \frac{1}{2}\frac{\xi}{\sqrt{1-\xi}}}{\sqrt{1-\xi} - \frac{3}{2}\xi} = \frac{f_1(\xi)}{f_2(\xi)}\,. \tag{40}$$

Table 1

The values of functions: $f_1(\xi)$; $f_2(\xi)$ for different ξ

ξ	0.1	0.2	0.3	0.4	0.5	0.6	0.66
$f_1(\xi)$	0.896	0.782	0.657	0.516	0.353	0.158	0
$f_2(\xi)$	0.922	0.836	0.741	0.632	0.500	0.316	0
$\eta(\xi)$	0.972	0.935	0.886	0.816	0.706	0.500	–

From the point of view of the practical application important matter is to show how each case: 1 and 2, change the flow for the case when:

$$\tau_w = \tau_b \tag{41}$$

and so

$$V_p = 0 \tag{42}$$

and therefore

$$\xi = \frac{\tau_w}{\tau_b + \tau_w} = \frac{1}{2}\,. \tag{43}$$

We put now $\xi = 0.5$ in the eqs. (38), (39) and it gives:

$$V_{01} = 0.353C\sqrt{HI_b}$$

and

$$V_{02} = 0.500C\sqrt{HI_b}\;. \tag{44}$$

From equation (44) it can be concluded that the model 1 represents flow with bigger resistance and so the mean velocity is smaller than in the case 2.

The same conclusion concerns also the velocity at the free surface:

– for the case 1

$$V_p^{(1)} = \frac{3}{2} C \sqrt{HI_b} \frac{1-2\xi}{\sqrt{1-\xi}}, \tag{45}$$

– for the case 2

$$V_p^{(2)} = \frac{3}{2} C \sqrt{HI_b} \frac{1-2\xi}{\sqrt{1-\frac{3}{2}\xi}}, \tag{46}$$

and the maximal velocity:

– for the case 1

$$V_{x\max}^{(1)} = \frac{3}{2} C \sqrt{HI_b} (1-\xi)^{3/2}, \tag{47}$$

– for the case 2

$$V_{x\max}^{(2)} = \frac{3}{2} C \sqrt{HI_b} \frac{(1-\xi)^2}{\sqrt{1-\frac{3}{2}\xi}}, \tag{48}$$

and the back current flow at the surface and the main flow are as follows:

– for the case 1

$$q_1^{(1)} = \frac{1}{4} CH \sqrt{HI_b} \frac{(2-\xi)(2\xi-1)^2}{\sqrt{1-\xi}}, \tag{49}$$

$$q_2^{(1)} = \frac{1}{4} CH \sqrt{HI_b} (1-\xi)^{5/2}, \tag{50}$$

– for the case 2

$$q_1^{(2)} = \frac{1}{4} CH \sqrt{HI_b} \frac{(2-\xi)(1-2\xi)^2}{\sqrt{1-\frac{3}{2}\xi}}, \tag{51}$$

$$q_2^{(2)} = \frac{1}{4} CH \sqrt{HI_b} \frac{(1-\xi)^3}{\sqrt{1-\frac{3}{2}\xi}}. \tag{52}$$

From equations (45) to (51), it comes that in the model of turbulence described by "case 2", the wind easier forms the back current at the surface and the velocities are bigger.

In interesting case of flow can be considered if $\tau_w = \tau_b$, so $V_p = 0$ and $\xi = 1/2$ and we are looking for the river depth satisfying the same discharge in the case 1 and 2. It reduces the problem to eq. (44).

So we have:

$$0.353\frac{\sqrt{I_b}}{n}H_1^{5/3} = 0.500\frac{\sqrt{I_b}}{n}H_2^{5/3},$$

therefore (53)

$$H_2 = H_1(0.706)^{0.6} = 0.81H_1.$$

In the above equations the symbol H_1 – denotes the depth for the solution assuming model 1 (case 1) and H_2 – denotes the depth for the model 2 (case 2). To create the situation with zero surface velocity and the same flow each case leads to different depth.

3. THE CONCEPT OF WIND BACKWATER CURVE

3.1. EQUATION OF WIND BACKWATER CURVE

The equation of the wind backwater curve comes from relation eq. (14). However in this formula we have to introduce certain model of turbulence to describe the dependence $\tau_w = f(\tau_b)$. Including relations (35) and (36) it gives:

– for the case 1

$$\frac{\tau_w + \tau_b}{\rho g H} = \frac{\tau_w + \frac{\rho}{4}\left[3\kappa_1 V_{01} + \sqrt{9\kappa_1^2 V_{01}^2} + 2\frac{\tau_w}{\rho}\right]}{\rho g H}, \tag{54}$$

– for the case 2

$$\frac{\tau_w + \tau_b}{\rho g H} = \frac{1}{C^2 H}V_{02}^2 + \frac{3}{2}\frac{\tau_w}{\rho g H}. \tag{55}$$

The above description means that now we have to introduce one of the formulae (54) or (55) instead of the last term in the equation (14).

To show the influence of wind in creating backwater curve it is easier taking the formula (55) i.e. the case 2. The relation between shear stress and velocity is then linear,

$$\tau_b = f(\tau_w, V_{02}) \,. \tag{56}$$

In engineering hydraulics it is often put critical depth H_{kr} as follows:

$$H_{kr} = \sqrt[3]{\frac{\alpha q^2}{g}} \,. \tag{57}$$

Where also

$$q = V_0 H = \text{const} \,. \tag{58}$$

Using the above notations, the eq. (14) turns to the ordinary differential equation:

$$-\left(\frac{H_{kr}}{H}\right)^3 \frac{dH}{dx} = -\frac{dRz}{dx} - \kappa \frac{H_{kr}^3}{H^2} \frac{d^2 H}{dx^2} - \frac{q^2}{C^2} \frac{1}{H^3} - \frac{3}{2} \frac{\tau_w}{\rho g H} \,. \tag{59}$$

In the case $x \to \infty$ eq. (59) turns to the formula relevant for the steady uniform flow. We have:

$$\lim_{x\to\infty} \frac{dH}{dx} = 0 \quad \text{and} \quad \lim_{x\to\infty} \frac{d^2 H}{dx^2} = 0 \,. \tag{60}$$

And so the equation (59) gives:

$$0 = I_b - \frac{q^2}{C^2} \frac{1}{H_{0w}^3} - \frac{3}{2} \frac{\tau_w}{\rho q H_{0w}} \,. \tag{61}$$

The symbol H_{0w} denotes river depth for the steady uniform flow with wind action. The equation (61) agrees with earlier obtained formula (38). We have:

$$\frac{q^2}{C^2} = H_{0w}^3 I_b \left(1 - \frac{3}{2}\xi\right). \tag{62}$$

Where now ξ is related to the case of steady and uniform flow:

$$\xi = \frac{\tau_w}{\rho g H_{0w} I_b} \,. \tag{63}$$

Substituting formula (62) to the eq. (59) we obtain finally the following relation:

$$\frac{dH}{dx} = -I_b \cdot \frac{1 - \left(\frac{H_{0w}}{H}\right)^3}{1 - \left(\frac{H_{kr}}{H}\right)^3} - \frac{\kappa \frac{H_{kr}^3}{H^2} \cdot \frac{d^2 H}{dx^2}}{1 - \left(\frac{H_{kr}}{H}\right)^3} - I_w \cdot \frac{\frac{H_{0w}}{H}\left[1 - \left(\frac{H_{0w}}{H}\right)^2\right]}{1 - \left(\frac{H_{kr}}{H}\right)^3}, \tag{64}$$

where:

$$I_w = \frac{3}{2}\frac{\tau_w}{\rho g H}. \tag{65}$$

I_w can be called "wind slope". Equation (64) is the basic description of the wind backwater curve. It differs from that one given in literature [1], [16], [17] comparing the last term.

It we put now:

$$\kappa = 0 \quad \text{and} \quad I_w = 0 \tag{66}$$

and we obtain the classical well known backwater curve equation

$$\frac{dH}{dx} = -I_b \frac{1-\left(\frac{H_0}{H}\right)^3}{1-\left(\frac{H_{kr}}{H}\right)^3}. \tag{67}$$

If in the equation (59) we put $\kappa = 0$ we tend to the case of wind affected backwater curve. It gives

$$\frac{dH}{dx} = -I_b \frac{1-\left(\frac{H_{0w}}{H}\right)^3}{1-\left(\frac{H_{kr}}{H}\right)^3} - I_w \frac{\frac{H_{0w}}{H}\left[1-\left(\frac{H_{0w}}{H}\right)^2\right]}{1-\left(\frac{H_{kr}}{H}\right)^3}. \tag{68}$$

From the formal point of view the above formula is the second order differential equation. To solve it we need boundary conditions:

$$\text{for } x = 0 \quad \text{we have} \quad H(0) = 0 \tag{69}$$

and the value

$$\left.\frac{dH}{dx}\right|_{x=0}. \tag{70}$$

It means that the second derivative eq. (68) of depth, needs to assume as boundary condition first derivative of depth i.e. the free water slope. So we can now describe the backwater curve for the case when river enters reservoir and the slope is equal to zero. The classical formula does not give the possibility to include such a case.

To solve the classical equation it needs to give only the depth at the $x = 0$. So

$$\text{for } x = 0 \quad \text{we have} \quad H = H(0), \tag{71}$$

and therefore the slope at the $x = 0$ can be calculated as follows

$$\frac{dH}{dx}\Big|_{x=0} = -I_b \frac{1-\left[\dfrac{H_0}{H(0)}\right]^3}{1-\left[\dfrac{H_{kr}}{H(0)}\right]^3} \neq 0 . \tag{72}$$

Note in the above equation H_0 denotes the depth in river in steady and uniform flow and $H(0)$ denotes depth of the piled water at the $x = 0$.

Equation (64) enables also to calculate the backwater curve for the case of flat (horizontal) bottom and no wind:

$$I_b = 0 \quad \text{and} \quad \tau_w = 0 . \tag{73}$$

It gives then

$$\frac{d^2H}{dx^2} \kappa \frac{H_{kr}^3}{H^2} + \frac{dH}{dx}\left[1-\left(\frac{H_{kr}}{H}\right)^3\right] = 0 . \tag{74}$$

In practical calculations for rough estimation approximate formulae can be used. To obtain the approximate solution following assumptions were applied:

– the piled part of the river depth is small with comparation to the river depth, and

– the ratio of the critical depth to the water depth is also small.

This assumptions can be accepted in mammy practical cases at the river mouth. The basic equation for this case takes form

$$\frac{1}{H-H_{0w}} \frac{d}{dx}(H-H_{0w}) = -I_b \frac{3}{H_{0w}} - I_w \frac{2}{H_{0w}} . \tag{75}$$

After substituting the dimensionless parameter ξ it gives

$$\frac{H-H_{0w}}{H_{0w}} = \text{const} \cdot \exp\left[-3I_b(1+\xi)\frac{x}{H_{0w}}\right] . \tag{76}$$

The constant value in eq. (76) is chosen in such a way to satisfy boundary condition.

$$x = 0 \qquad H = H(0) , \tag{77}$$

and therefore when $\tau_w = 0$

$$H(x) = H_0 + \left[H(0) - H_0\right] \cdot \exp\left[-3I_b \frac{x}{H_0}\right] , \tag{78}$$

and for the wind backwater curve

$$H(x) = H_{0w} + \left[H(0) - H_{0w}\right] \cdot \exp\left[-3I_b(1+\xi)\frac{x}{H_{0w}}\right]. \tag{79}$$

In the above equations: H_0 and H_{0w} are the depth in the river in uniform flow in the case of no wind and with wind shear stress. If we consider flow in which the discharge $q = \text{const}$ we can derive the following relation among them:

– for the case with no wind

$$q = \frac{1}{n_s} H_0^{5/3} \sqrt{I_b}\ , \tag{80}$$

– for the case with wind shear stress

$$q = \frac{1}{n_s} (H_{0w})^{5/3} \sqrt{I_b} \sqrt{1 - \frac{3}{2}\xi}\ , \tag{81}$$

and so

$$H_{0w} = H_0 \left(1 - \frac{3}{2}\xi\right)^{-0.3}. \tag{82}$$

In the above relation n denotes Maning roughness coefficient.

Equations (78) and (82) enable to compare the horizontal extent of the backwater curve in the case of no wind and with wind shear stress. We have

$$L_w = \frac{H_{0w}}{3I_b(1+\xi)} \ln\left[\frac{H(0) - H_{0w}}{s}\right] \tag{83}$$

in case with wind shear stress and for the case with no wind it gives

$$L_0 = \frac{H_0}{3I_b} \ln\left[\frac{H(0) - H_0}{s}\right]. \tag{84}$$

In the above equations following symbols were used: L_w – the horizontal extent of the wind backwater curve; L_0 – the horizontal extent in the case with no wind; s – the difference in the water level with backwater curve and in the case of uniform flow. Usually it is assumed:

$$s = 0.01 \text{ m}. \tag{85}$$

If we assume for lower Odra River $H_0 = 3.0$ m; $I_b = 5 \cdot 10^{-5}$; $\xi = 0.3$; and $H(0) = 4.0$ m it gives after calculations

$$H_{0w} = 3.0\left(1 - \frac{3}{2}0.3\right)^{-0.3} = 3.60\,\text{m, and}$$

$L_w = 67$ km,

$L_0 = 92$ km.

The calculations suggests that the backwater curve reaches in the river point Gozdowice. It can happen only in case of very strong wind. Conclusion comes that for the case with wind shear stress the horizontal extent is smaller. The approximate formulae they are especially useful in calculations covering long distance, for example sediment transport changes. In calculations of sediment stream we need the mean velocity, depth and shear velocity along the river. They can be calculated from eq. (78) and (79) and the shear velocity from formulae (34), (35) and (75).

We have

$$u_{*w} = \sqrt{\frac{\tau_b}{\rho}} = \sqrt{\frac{g}{C^2} V_0^2 + \frac{1}{2}\frac{\tau_w}{\rho}}\,, \tag{86}$$

$$V_0 = \frac{q}{H}, \tag{87}$$

and so, the term which appears in sediment transport calculations, takes form

$$\frac{V_0}{u_{*w}} = \frac{1}{\sqrt{\frac{g}{C^2} + \frac{1}{2}\frac{\tau_w}{\rho V_0^2}}}\,. \tag{88}$$

3.2. WIND BOUNDARY CONDITIONS

The most important factor in calculations of the wind backwater curve is the wind shear stress. The second factor is the river bed slope and then depth of water at the boundary $x = 0$. It needs also to specify the flow parameters for uniform flow with no wind.

The most crucial is the relation describing wind shear stress. In the literature the most common formula is [1], [2], [9], [16], [17].

$$\tau_w = \kappa_w \rho W^2 \tag{89}$$

in this equation W – denotes wind speed, ρ – density of water, κ_w – dimensionless parameter. From field experiments for Lower Odra River it comes [2].

$$\kappa_w = 10^{-6} \div 2 \cdot 10^{-6}\,. \tag{90}$$

And now from equation (88) it can be concluded the wind speed W which has significant influence on sediment transport. The evaluation gives that it depends on the term

$$\frac{1}{2}\kappa_w \frac{C^2}{g}\left(\frac{W}{V_0}\right)^2 \tag{91}$$

and this term should be of order 1/2. It allows to define the wind speed of significant importance for sediment stream

$$W = V_0 \left(\frac{C}{\sqrt{g}} \sqrt{\kappa_w} \right)^{-1} . \tag{92}$$

In practical cases for Lower Odra River it means wind of the speed $W = (50 \div 80) V_0$, what gives about 10 m/s. The scheme of the boundary conditions for the wind backwater curve are given in Fig. 8.

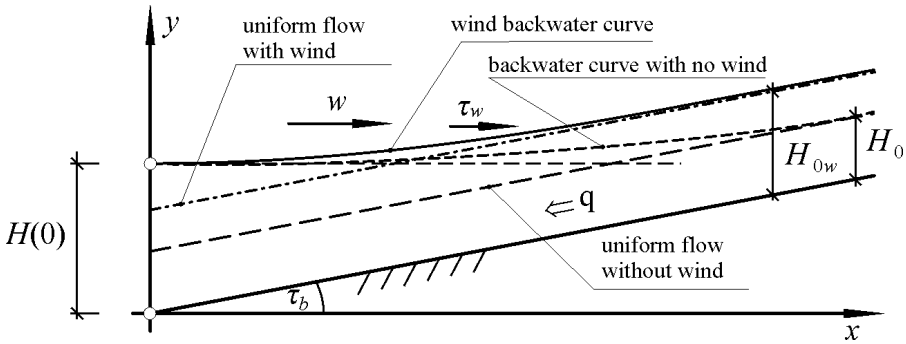

Fig. 8. Boundary conditions for the wind backwater curve

The characteristic feature of the backwater curve is the change of velocity profile. The surface velocity of water is slow down by the wind blowing opposite to the water flow. But the wind effect diminish upstream. It is shown in Fig. 9.

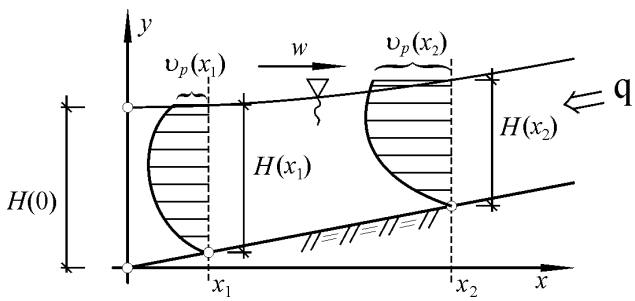

Fig. 9. The change of tachoida shape due to wind influence

In the extreme case of a very strong wind at the surface there can be created back current. The water at the upper layer is flowing opposite to the main flow. It is shown in Fig. 10.

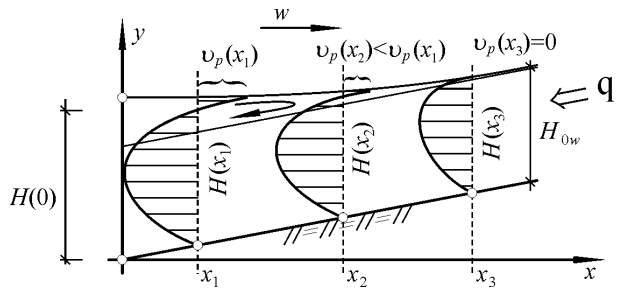

Fig. 10. Tachoidas in river in case of wind back current

In Figure 10 there is shown the mechanism of formation of wind back current at the surface layers. It can be seen that a circulation region is created in this area. It extends up to $x = x_3$.

And further upstream the normal wind backwater curve exists. This sort of flow has special meaning when wastes are discharged into the river. The wind is able to push them upstream.

4. EVALUATION EXAMPLE

As the example of calculations of wind backwater curve in natural river Lower Odra River was chosen and distance from Szczecin to Gozdowice. Preliminary calculations presented in this paper shown that the backwater curve can cover the whole distance. In the calculations it was taken: $H(0)$ = 5.5 m; Q = 550 m^3/s; W = 10 m/s; $I_b = 5 \cdot 10^{-5}$ and $\kappa_w = 2 \cdot 10^{-6}$. The results are given in Fig. 11.

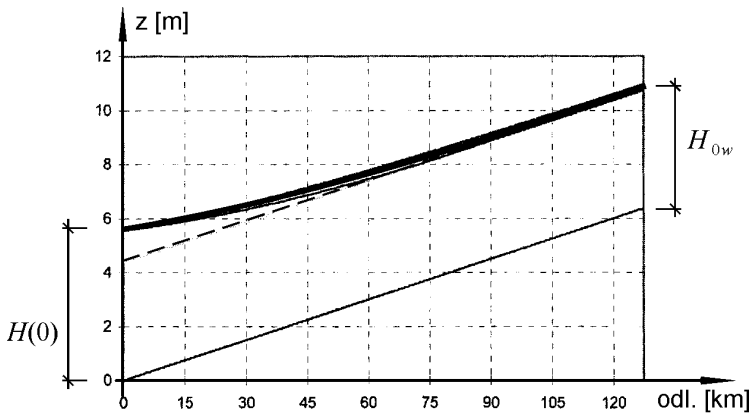

Fig. 11. Wind backwater curve in Lower Odra River for Q = 550 m^3/s [Libront 3]

In Figure 12 these is shown the wind backwater curve for Lower Odra River in the case $Q = 250$ m^3/s.

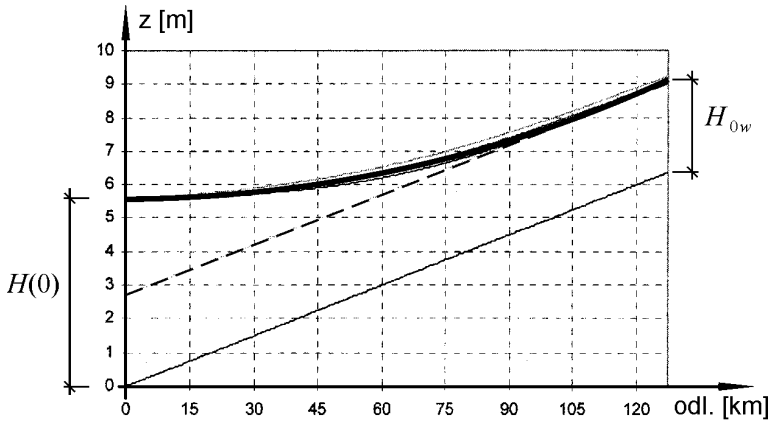

Fig. 12. Wind backwater curve in Lower Odra River for $Q = 250$ m^3/s [Libront 3]

In Figure 13 these is shown the water level changes at Gozdowice cross section due to wind influence

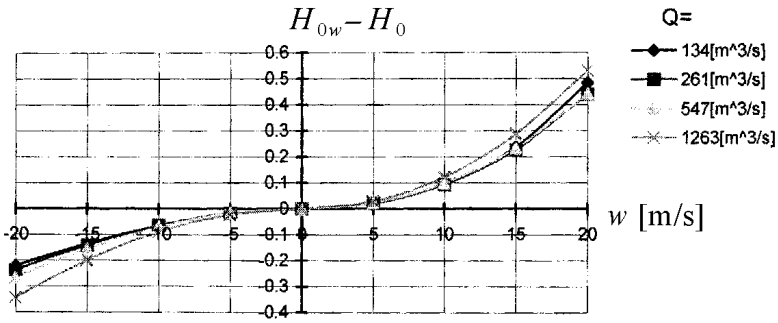

Fig. 13. Water level changes at Gozdowice due to wind influence [Libront 3]

5. CONCLUSIONS

5.1. The analysis of wind backwater curve formation is presented in this paper.

5.2. The mechanism of formation of the wind backwater curve was estimated using the basic hydrodynamics equations of motion and the model of the vertical turbulent momentum transfer.

5.3. Two models of the turbulent momentum transfer were considered one based on the shear velocity and the other on the mean velocity. The mechanism of creation of the wind backwater curve based on the models is the same. Different are the resulting depth and the surface velocity. In case of the model with shear velocity it seems to be that the water system presents stronger resistance against wind. So certain effects need stronger wind. The phenomenon needs further research.

5.4. From the analysis of the wind backwater curve it comes that in the case of very strong wind, blowing opposite to the flow a back current can be created. In this case water at the upper layers flows opposite to the main flow. It has been confirmed in literature [Buchholz 1].

5.5. The presented model of the backwater curve needs further field experiments. Especially the way of calculation of the wind shear stress, and the model of turbulence in vertical momentum transfer.

BIBLIOGRAPHY

[1] BUCHHOLZ W., *Wpływ wiatru na przepływy w ujściach rzek* (*Wind influence on river outlet flow*), Wyd. Inst. Morskiego, Gdańsk 1989.

[2] COUFAL R., *Bed Changes and Sediment Transport at River Mouth*, Institute of Hydroengeneering, Polish Academy of Science, Hydrotechnics, No. 23, Gdańsk 1997.

[3] LIBRONT D., *Wpływ prędkości wiatru zmieniającej się wzdłuż koryta dolnej Odtry na stany i przepływy wody* (*Wind influence varing along river on depth and flow*), PhD Thesis, Wydz. Bud. i Arch. Politechniki Szczecińskiej, Szczecin 1999.

[4] MEYER Z., *Hydrauliczne warunki dopływu wody do ujęcia w warunkach stratyfikacji gęstości* (*Hydraulic condition of water in flow to selective withdrawal*), Archiwum Hydrotechniki, 1979, p. 371–396.

[5] MEYER Z., *Vertical circulation in Reservoir Due to Selective Withdrawal*, Rozprawy Hydrotechniczne, 1981, p. 193–219.

[6] MEYER Z., *Vertical Evaluation in Density Stratified Reservoir*, Journal of the Hydraulics, Div. ASCE HY, 7, 1982, p. 853–873.

[7] MEYER Z., *Axisymmetric Vertical Circulation in a Stratified Reservoir*, Journal of Hydraulics Research, 1983, p. 133–152.

[8] MEYER Z., *Mechanics of Bottom Density Wedges*, Archiwum Hydrotechniki, No. 2, 1985.

[9] MEYER Z., *Vertical Circulation in Density Stratified Reservoirs*, Encyclopedia of Fluid Mechanics, Vol. 2, Gulf Publishing Co. Huston, 1986, p. 572–636.

[10] MEYER Z., *Modified Logarythmic Tachoid Applied to Sediment Transport in River*, Acta Geophysica, Institute of Geophysics, Polish Academy of Sciences, Warszawa 2009.

[11] MEYER Z., COUFAL R., *Wind Shear Stress Affected Sediment Transport at River Mouth*, Proceedings of International Congress of Hydro-Science-Engineering ICHE'93, Mississippi, USA, 1993.

[12] MEYER Z., EWERTOWSKI R., *Influence of Atmospheric Pressure Changes on Channel Flow-Numerical Solution*, 6-th German Polish Seminar on Coastal and Estuary Dynamics, Ueckermuende 1997.

[13] MEYER Z., EWERTOWSKI R., *Flow Friction Forces Effect on Baroscopic Wave Attenuation in River Mouth*, Archives of Hydroengineering and Environmental Mechanics, Gdańsk 1998.

[14] MEYER Z., PACEWICZ F., *Wpływ lokalnych zmian zwierciadła wody na kształt krzywej spiętrzenia* (*Local river slope changes on backwater curve*), Konferencja Naukowa *Wybrane Problemy Hydrotechniczne ujścia Odry do Bałtyku*, Instytut Morski, O/Szczecin 1984.

[15] MEYER Z., PLUTA M., *Zastosowanie modelu przepływu stratyfikowanego do analizy transportu rumowiska w zagłębieniu dennym* (*Stratified flow model applied to to sediment transport in river cavern*), Konferencja *Zastosowania mechaniki w budownictwie lądowym i wodnym* poświęcona 70-leciu urodzin Profesora Piotra Wilde, Instytut Budownictwa Wodnego, PAN, Gdańsk 2001.

[16] PRANDTL L., *Dynamika przepływów* (*Dynamics of Flows*), PWN, Warszawa 1956.

[17] PUZYREWSKI R., SAWICKI J., *Podstawy mechaniki płynów i hydrauliki* (*Basies of Fluid Mechanics and Hydraulics*), PWN, Warszawa 1998.